Linear Ball Bearing

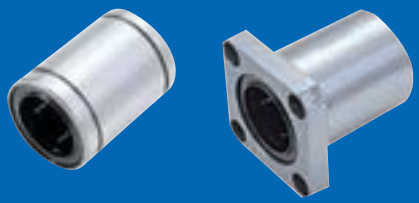

1-1 Features of TBI MOTION Linear Ball Bearing F02
LM Series Specifications (Standard) F02
LM-L Series Specifications (Lengthen) F03
LF Series Specifications (Flange Type) F04
LF-L Series Specifications (Flange Type with Lengthen Nut) F05
LU/LP Series Specifications (Aluminum Housing Type) F06
SF/WV Series Specifications (Shaft) F07
SS Series Specifications (Shaft Support) F08

1-1 Features of *TBI MOTION* Linear Ball Bearing

LM Series Specifications (Standard)

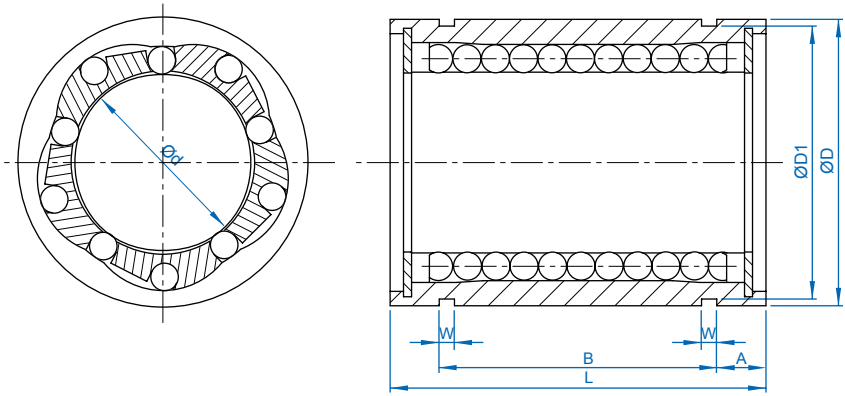

Unit : mm

ModelNo.	Dimension									Ca (kgf)	Coa (kgf)	Weight (g)
	d	D	Tolerance (μm)	L	LTolerance (μm)	W	D1	B	A			
LM-04UU	4	8	0 -11	12	0 -20	-	-	-	-	9	13	2
LM-06UU	6	12		19		1.1	11.5	13.5	2.75	21	27	8
LM-08UU	8	15		24		1.1	14.3	17.5	3.25	27	41	16
LM-10UU	10	19	0 -13	29		1.3	18	22	3.5	38	56	30
LM-12UU	12	21		30		1.3	20	23	3.5	42	61	31.5
LM-16UU	16	28		37		1.6	27	26.5	5.25	79	120	69
LM-20UU	20	32	0 -16	42		1.6	30.5	30.5	5.75	88	140	87
LM-25UU	25	40		59	0 -30	1.85	38	41	9	100	159	220
LM-30UU	30	45		64		1.85	43	44.5	9.75	159	279	250
LM-40UU	40	60	0 -19	80		2.1	57	60.5	9.75	219	409	585
LM-50UU	50	80		100		2.6	76.5	74	13	389	808	1580

※UU has oil seals at the ends

LM-L Series Specifications (Lengthen)

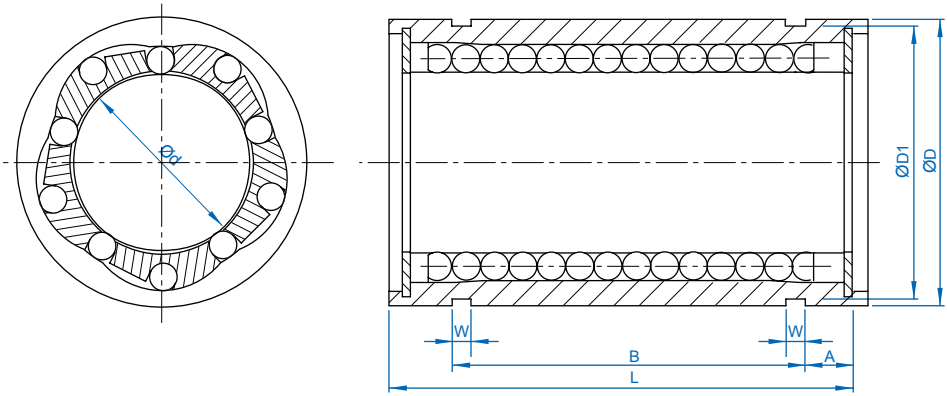

Unit : mm

Model No.	Dimension									Ca (kgf)	Coa (kgf)	Weight(g)
	d	D	D Tolerance (μm)	L	L Tolerance (μm)	W	D1	B	A			
LM-06LUU	6	12	0 -13	35	0 -30	1.1	11.5	27	4	33	54	16
LM-08LUU	8	15		45		1.1	14.3	35	5	44	80	31
LM-10LUU	10	19	0 -16	55		1.3	18	44	5.5	60	112	62
LM-12LUU	12	21		57		1.3	20	46	5.5	83	160	80
LM-16LUU	16	28		70		1.6	27	53	8.5	126	240	145
LM-20LUU	20	32	0 -19	80		1.6	30.5	61	9.5	143	280	180
LM-25LUU	25	40		112	0 -40	1.85	38	82	15	159	320	440
LM-30LUU	30	45		123		1.85	43	89	17	254	560	580
LM-40LUU	40	60	0 -22	151		2.1	57	121	15	350	820	1170
LM-50LUU	50	80		192		2.6	76.5	148	22	620	1622	3100

※UU has oil seals at the ends

1-1 Features of *TBI MOTION* Linear Ball Bearing

LF Series Specifications (Flange Type)

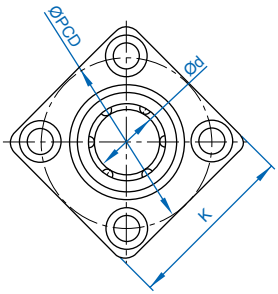

Type : D

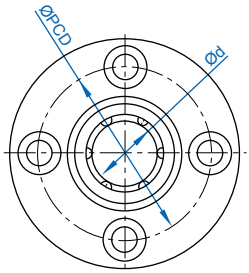

Type : N

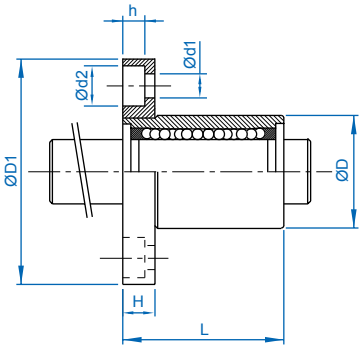

Unit : mm

Model No.	Dimension												Ca (kgf)	Coa (kgf)	Weight (g)
	d	D	D Tolerance (μm)	L	L Tolerance (μm)	D1	PCD	H	K	d1	d2	h			
LF-06UU	6	12	0 -11	19	0 -20	28	20	5	22	3.5	6	3.1	21	27	8
LF-08UU	8	15		24		32	24	5	25	3.5	6	3.1	28	40	16
LF-10UU	10	19	0 -13	29		40	29	6	30	4.5	7.5	4.1	38	56	30
LF-12UU	12	21		30		42	32	6	32	4.5	7.5	4.1	52	80	31.5
LF-16UU	16	28		37		48	38	6	37	4.5	7.5	4.1	79	120	69
LF-20UU	20	32	0 -16	42		54	43	8	42	5.5	9	5.1	90	140	87
LF-25UU	25	40		59	0 -30	62	51	8	50	5.5	9	5.1	100	159	220
LF-30UU	30	45		64		74	60	10	58	6.6	11	6.1	159	279	250
LF-40UU	40	60	0 -19	80		96	78	13	75	9	14	8.1	218	409	585
LF-50UU	50	80		100		116	98	13	92	9	14	8.1	389	808	1580

※UU has oil seals at the ends

LF-L Series Specifications (Flange Type with Lengthen Nut)

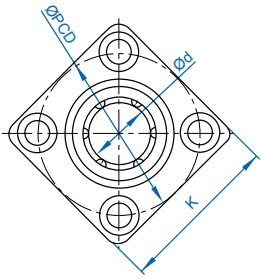

Type : D

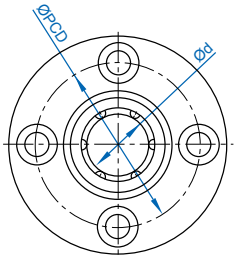

Type : N

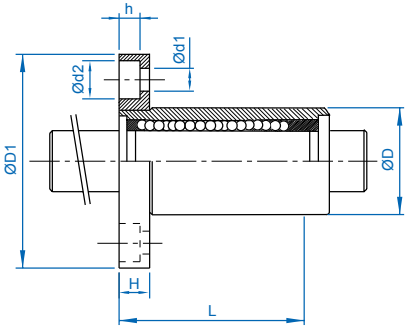

Unit : mm

ModelNo.	Dimension												Ca (kgf)	Coa (kgf)	Weight (g)
	d	D	D Tolerance (μm)	L	L Tolerance (μm)	D1	PCD	H	K	d1	d2	h			
LF-06LUU	6	12	0 -13	35	0 -30	28	20	5	22	3.5	6	3.1	33	54	16
LF-08LUU	8	15		45		32	24	5	25	3.5	6	3.1	44	80	31
LF-10LUU	10	19	0 -16	55		40	29	6	30	4.5	7.5	4.1	60	112	62
LF-12LUU	12	21		57		42	32	6	32	4.5	7.5	4.1	83	160	80
LF-16LUU	16	28		70		48	38	6	37	4.5	7.5	4.1	126	240	145
LF-20LUU	20	32	0 -19	80		54	43	8	42	5.5	9	5.1	143	280	180
LF-25LUU	25	40		112	0 -40	62	51	8	50	5.5	9	5.1	159	320	440
LF-30LUU	30	45		123		74	60	10	58	6.6	11	6.1	254	560	580
LF-40LUU	40	60	0 -22	151		96	78	13	75	9	14	8.1	350	820	1170
LF-50LUU	50	80		192		116	98	13	92	9	14	8.1	620	1622	3100

※UU has oil seals at the ends

1-1 Features of *TBI MOTION* Linear Ball Bearing

LU/LP Series Specifications (Aluminum Housing Type)

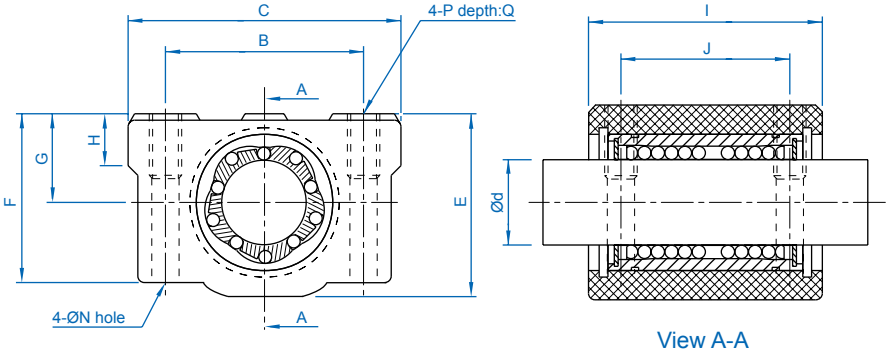

Unit : mm

Model No.	Dimension												Ca (kgf)	Coa (kgf)	Weight (g)
	d	B	C	E	F	G ±0.02	H	I	J	N	P	Q			
LU-08UU LP-08	8	24	34	22	18	11	6	30	18	3.4	M4	8	28	40	52
LU-10UU LP-10	10	28	40	26	21	13	8	35	21	4.3	M5	12	38	56	92
LU-12UU LP-12	12	30.5	42	29	25	15	8	36	26	4.3	M5	12	52	80	102
LU-16UU LP-16	16	36	50	38.5	32.5	19	9	44	34	4.3	M5	12	79	120	200
LU-20UU LP-20	20	40	54	41	35	21	11	50	40	5.2	M6	12	90	140	255
LU-25UU LP-25	25	54	76	51.5	42	26	12	67	50	7	M8	18	100	160	600
LU-30UU LP-30	30	58	78	59.5	49	30	15	72	58	7	M8	18	160	280	735
LU-40UU LP-40	40	80	102	78	62	40	20	90	60	8.7	M10	25	220	410	1590
LU-50UU LP-50	50	100	122	102	80	52	25	110	80	8.7	M10	25	390	810	3340

※LP series does not include Linear ball bearing.

SF/WV Series Specifications (Shaft)

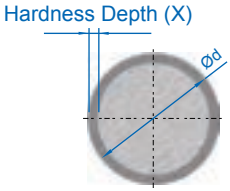

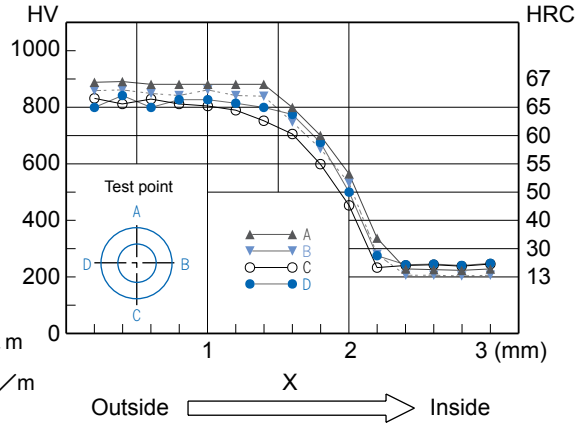

Material：S55C／SUJ2

Hardness：HRC 60 Up

Surface Roughness：Ra 0.15-0.35 μm

Shaft Straightness：approx. 0.1 mm／m

Unit：mm

Model No.	d	Hardness Depth (X)
SF-08 ★	8	1.0
SF-10 ★	10	1.0
SF-12 ★	12	1.6
SF-16 ★	16	1.6
SF-20 ★	20	2.2
SF-25 ★	25	2.2
SF-30 ★	30	2.2
SF-32 ★	32	2.2
SF-40 ★	40	3.5
SF-50 ★	50	3.5

※With ★ can supply Chromium plated slide shaft (Model No. WV).

1-1 Features of *TBI MOTION* Linear Ball Bearing

SS Series Specifications (Shaft Support)

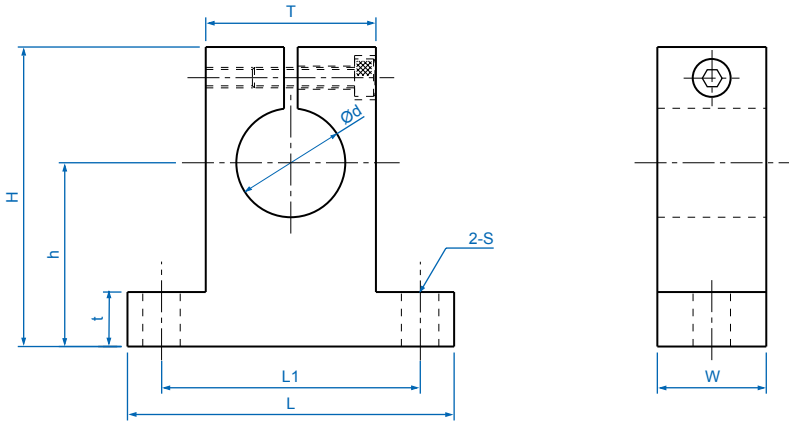

Unit : mm

Model No.	Dimension									Weight(g)
	d	h	L	W	H	t	T	L1	S	
SS-08	8	20	42	14	32.8	6	18	32	5.5	24
SS-10	10	20	42	14	32.8	6	18	32	5.5	24
SS-12	12	23	42	14	37.5	6	20	32	5.5	30
SS-16	16	27	48	16	44	8	25	38	5.5	40
SS-20	20	31	60	20	51	10	30	45	6.6	70
SS-25	25	35	70	24	60	12	38	56	6.6	130
SS-30	30	42	84	28	70	12	44	64	9	180
SS-40	40	60	114	36	96	15	60	90	11	420
SS-50	50	70	126	40	120	18	74	100	14	750

Support Unit of Ball Screw

1-1 Features of TBI MOTION Support Unit of Ball Screw G02
1-2 Assembling Steps of TBI MOTION Linear Ball Bearing G04
1-3 Checking Geometric Accuracy G05
1-4 Connect Ball Screw Motor G05
BK Series (Fixed End) G06
BK Series (Fixed End) G08
BF Series (Floated End) G10
EK Series (Fixed End) G12
EK Series (Fixed End) G14
EF Series (Floated End) G16
FK Series (Fixed End) G18
FK Series (Fixed End) G20
FF Series (Floated End) G22

1-1 Features of *TBI MOTION* Support Unit of Ball Screw

BK/EK/FK/BF/EF/FF

Floated End		
Square type	Convex type	Flange type

Surface Treatment : Black Oxidation

Supporting End		
Square type	Convex type	Flange type

Surface Treatment : Black Oxidation

Table 1.1.1 Types of Support and Suggested Diameter of Ball Screw

FixedEndModel			SimpleEndModel			SuggestedDiameter
FlangeType	SquareType		FlangeType	SquareType		
-	EK-6	-	FF-6	EF-6	-	Ø4,Ø6
FK-8	EK-8	-	FF-8	EF-8	-	Ø8,Ø10,Ø12
FK-10	EK-10	BK-10	FF-10	EF-10	BF-10	Ø12,Ø14,Ø15
FK-12	EK-12	BK-12	FF-12	EF-12	BF-12	Ø14,Ø15,Ø16
FK-15	EK-15	BK-15	FF-15	EF-15	BF-15	Ø18,Ø20
-	-	BK-17	-	-	BF-17	Ø20,Ø25
FK-20	EK-20	BK-20	FF-20	EF-20	BF-20	Ø25,Ø28
FK-25	EK-25	BK-25	FF-25	EF-25	BF-25	Ø32,Ø36
FK-30	-	BK-30	FF-30	-	BF-30	Ø36,Ø40
-	-	BK-35	-	-	BF-35	Ø40,Ø45,Ø50
-	-	BK-40	-	-	BF-40	Ø50,Ø55

Table 1.1.2 Function

Fixed End				Simple End			
Support Model	Bearing Model	Axial		Support Model	Bearing Model	Radial	
		Ca (kgf)	K kgf/μm			Ca (kgf)	Coa (kgf)
EK-6	706ATYDF	273	2.9	**EF-6, FF-6**	606ZZ	231	88
EK-8, FK-8	708ATYDF	450	5.4	**EF-8, FF-8**	606ZZ	231	88
BK-10, EK-10, FK-10	7000ATYDF	620	9.6	**BF-10, EF-10, FF-10**	608ZZ	335	142
BK-12, EK-12, FK-12	7001ATYDF	679	10.6	**BF-12, EF-12, FF-12**	6000ZZ	465	200
BK-15, EK-15, FK-15	7002ATYDF	775	11.5	**BF-15, EF-15, FF-15**	6002ZZ	570	289
BK-17	7203ATYDF	1397	12.7	**BF-17**	6203ZZ	979	469
BK-20	7004ATYDF	1295	14.2	**BF-20**	6004ZZ	958	515
EK-20, FK-20	7204ATYDF	1820	15.8	**EF-20, FF-20**	6204ZZ	1300	702
BK-25, EK-25, FK-25	7205ATYDF	2060	19.4	**BF-25, EF-25, FF25**	6205ZZ	1430	800
BK-30, FK-30	7206ATYDF	2856	19.8	**BF-30, FF30**	6206ZZ	1989	1152
BK-35	7207ATYDF	3794	26.0	**BF-35**	6207ZZ	2621	1560
BK-40	7208ATYDF	4498	27.5	**BF-40**	6208ZZ	2968	1815

※When the nominal diameter of ball screw is Ø6 and use EK06 or EF06, ball screw has to be precision ground type.

1-1 Assembling Steps of *TBI MOTION* Linear Ball Bearing

■ 1-1 Installing Ball Screw with Support Units

(1) Assemble the fixed end Support Unit with the screw shaft.
※ Do not disassemble the Support Unit.
※ When assembling the screw shaft to the Support Unit, make sure that the dimension between machine ends and bearing are matched.

(2) After inserting the fixed end Support Unit, secure the lock nut by using the fasten set piece and the hexagonal socket-head set screws.
※ Please contact TBI for special condition of mounting methods.

(3) Attach the floated end bearing to the screw shaft and secure the bearing with the C-ring.

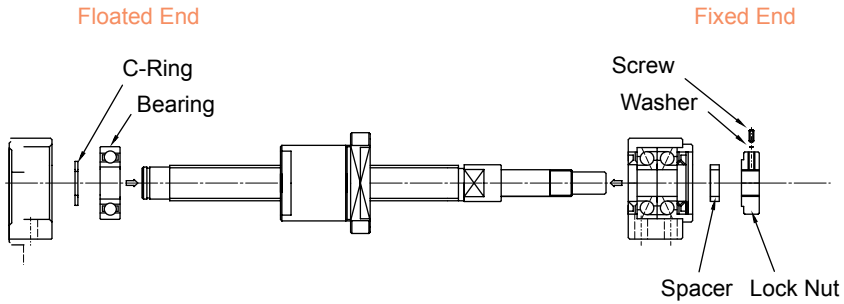

Fig 1.1.1

■ 1-2 Assemble the Nut Bracket

(1) Fix the ball screw to the bracket(temporarily).

(2) Assemble the fixed end Support unit with bearing.

(3) Ensure the parallelism between reference surface(linear guide) and ball screw, then fix both end and floated end.

(4) Move the table toward fixed and floated end to ensure the smoothness of the ball screw then fasten it to the bracket.

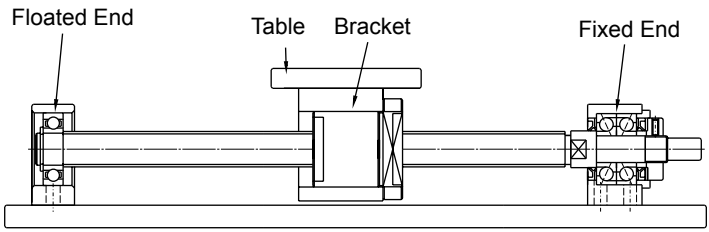

Fig 1.2.1

■ 1-3 Checking Geometric Accuracy

(1) Measure the runout of fixed side support unit and the axial backlash of support side support unit.

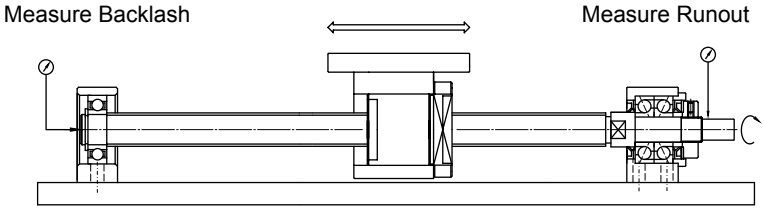

Fig 1.3.1

■ 1-4 Connect Ball Screw Motor

(1) Mount the motor bracket to the base.

(2) Connect the motor and the ball screw with a coupling(Careful with accuracy while mounting)

(3) Completed run test.

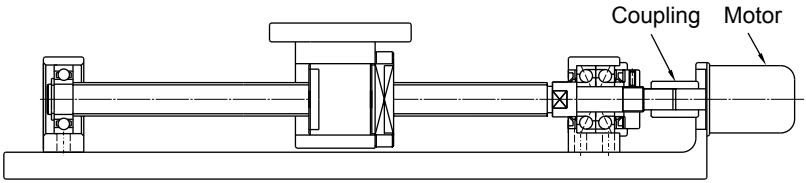

Fig 1.4.1

1-1 Features of *TBI MOTION* Support Unit of Ball Screw

BK Series (Fixed End)

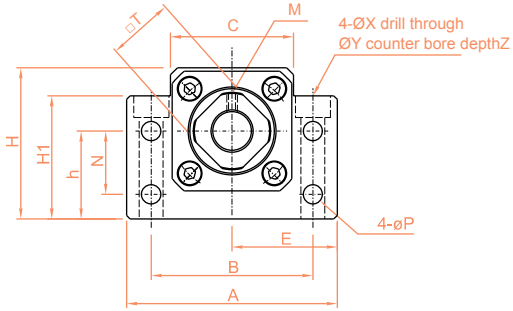

ModelNo.	D1	A	B	C	C1	C2	E ±0.02	H1	h ±0.02	H
BK-10	10	60	46	34	13	6	30	32.5	22	39
BK-12	12	60	46	34	13	6	30	32.5	25	43
BK-15	15	70	54	40	15	6	35	38	28	48
BK-17	17	86	68	50	19	8	43	55	39	64
BK-20	20	88	70	52	19	8	44	50	34	60

Suggest Dimension of End Machining

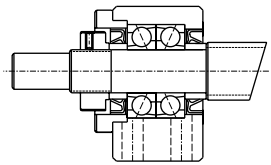

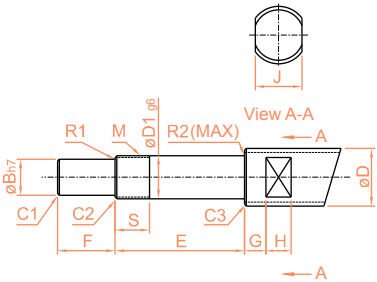

ModelNo.	Diameter	D1	B	E	F	M
BK-10	Ø12,Ø14,Ø15	10	8	39	15	M10×1
BK-12	Ø14,Ø15,Ø16,Ø18	12	10	39	15	M12×1
BK-15	Ø18,Ø20	15	12	40	20	M15×1
BK-17	Ø20,Ø25	17	15	53	23	M17×1
BK-20	Ø25,Ø28	20	17	53	25	M20×1

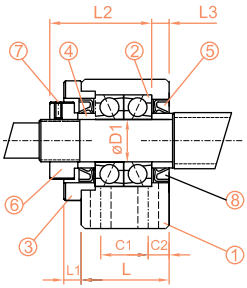

Code	Items	pcs
1	Housing	1PCS
2	Bearing	1SET
3	Lid	1PCS
4	Spacer	2PCS
5	Seal	2PCS
6	Lock Nut	1PCS
7	Screw with Washer	1PCS

Unit : mm

L	L1	L2	L3	T	P	N	M	X	Y	Z	Bearing Model
25	5	29	5	16	5.5	15	M3	6.6	11	5	7000ATYDFC8P5
25	5	29	5	19	5.5	18	M3	6.6	11	1.5	7001ATYDFC8P5
27	6	32	6	22	5.5	18	M3	6.6	11	6.5	7002ATYDFC8P5
35	9	44	7	24	6.6	28	M4	9	14	8.5	7203ATYDFC8P5
35	8	43	8	30	6.6	22	M4	9	14	8.5	7004ATYDFC8P5

H1 Type

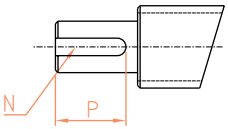

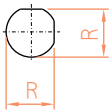

H2 Type

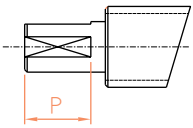

Tolerance

Dimension(mm)		unit $^{h}_{0.001}$
Above	Under	h
6	10	-2 -15
10	18	-3 -18
18	24	-3 -21

S	J	G	H	Chamfering			Circular Radius		H1 Keyway(W×D×L)		H2		Model BK
				C1	C2	C3	R1	R2	N	P	R	P	
16	10	5	7	0.5	0.5	0.5	0.3	0.6	2×1.2	11	7.5	11	BK-10
14	13	6	8	0.5	0.5	0.5	0.3	0.6	3×1.8	12	9.5	12	BK-12
12	16	6	9	0.5	0.5	0.5	0.3	0.6	4×2.5	16	11.3	16	BK-15
17	18	7	10	0.5	0.5	0.5	0.3	0.6	5×3.0	21	14.3	21	BK-17
15	21	8	11	0.5	0.5	0.5	0.5	0.6	5×3.0	21	16	21	BK-20

1-1 Features of *TBI MOTION* Support Unit of Ball Screw

BK Series (Fixed End)

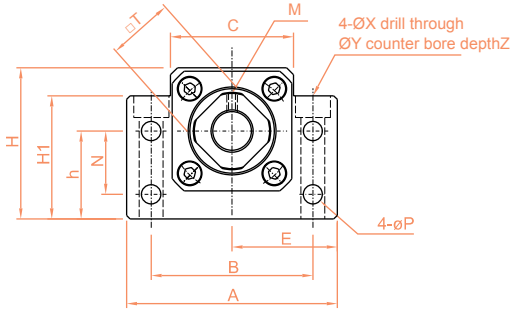

ModelNo.	D1	A	B	C	C1	C2	E ±0.02	H1	h ±0.02	H
BK-25	25	106	85	64	22	10	53	70	48	80
BK-30	30	128	102	76	23	11	64	78	51	89
BK-35	35	140	114	88	26	12	70	79	52	96
BK-40	40	160	130	100	33	14	80	90	60	110

Suggest Dimension of End Machining

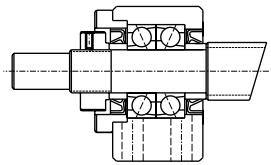

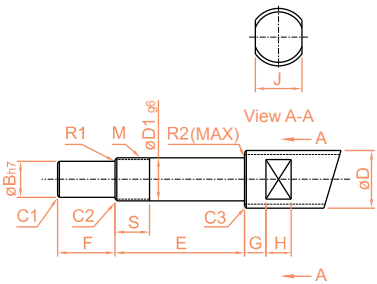

ModelNo.	Diameter	D1	B	E	F	M
BK-25	Ø32,Ø36	25	20	65	30	M25×1.5
BK-30	Ø36,Ø40	30	25	72	38	M30×1.5
BK-35	Ø40,Ø45,Ø50	35	30	83	45	M35×1.5
BK-40	Ø50,Ø55	40	35	98	50	M40×1.5

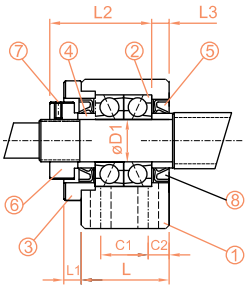

Code	Items	pcs
1	Housing	1PCS
2	Bearing	1SET
3	Lid	1PCS
4	Spacer	2PCS
5	Seal	2PCS
6	Lock Nut	1PCS
7	Screw with Washer	1PCS

Unit : mm

L	L1	L2	L3	T	P	N	M	X	Y	Z	Bearing Model
42	12	54	9	35	9	33	M5	11	17.5	11	7205ATYDFC8P5
45	14	61	9	40	11	33	M6	14	20	13	7206ATYDFC8P5
50	14	67	12	50	11	35	M8	14	20	13	7207ATYDFC8P5
61	18	76	15	50	14	37	M8	18	26	17.5	7208ATYDFC8P5

H1 Type

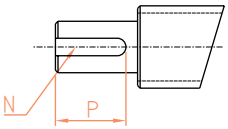

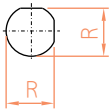

H2 Type

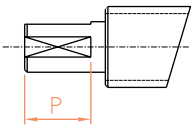

Tolerance

Dimension(mm)		unit $^{h}_{0.001}$
Above	Under	h
18	30	-3 -21
30	50	-4 -25

S	J	G	H	Chamfering			Circular Radius		H1 Keyway(W×D×L)		H2		Model BK
				C1	C2	C3	R1	R2	N	P	R	P	
18	27	10	13	0.5	0.7	1.0	0.5	0.6	6×3.5	25	19	25	BK-25
25	32	10	15	0.5	0.7	1.0	0.5	1.0	8×4.0	32	23.5	32	BK-30
28	36	12	15	0.5	1.0	1.0	0.5	1.0	8×4.0	40	28.5	40	BK-35
35	41	14	19	0.5	1.0	1.0	0.5	1.0	10×5.0	45	33	45	BK-40

1-1 Features of *TBI MOTION* Support Unit of Ball Screw

BF Series (Floated End)

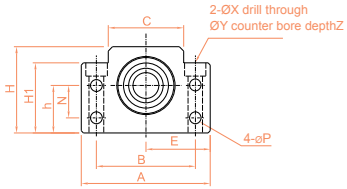

ModelNo.	D1	A	B	C	E ±0.02	H1	h ±0.02	H
BF-10	8	60	46	34	30	32.5	22	39
BF-12	10	60	46	34	30	32.5	25	43
BF-15	15	70	54	40	35	38	28	48
BF-17	17	86	68	50	43	55	39	64
BF-20	20	88	70	52	44	50	34	60
BF-25	25	106	85	64	53	70	48	80
BF-30	30	128	102	76	64	78	51	89
BF-35	35	140	114	88	70	79	52	96
BF-40	40	160	130	100	80	90	60	110

Suggest Dimension of End Machining

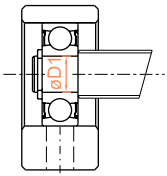

ModelNo.	Diameter	D1	E
BF-10	Ø12,Ø14,Ø15	8	10
BF-12	Ø14,Ø15,Ø16	10	11
BF-15	Ø18,Ø20	15	13
BF-17	Ø20,Ø25	17	16
BF-20	Ø25,Ø28	20	16
BF-25	Ø32,Ø36	25	20
BF-30	Ø36,Ø40	30	21
BF-35	Ø40,Ø45,Ø50	35	22
BF-40	Ø50,Ø55	40	23

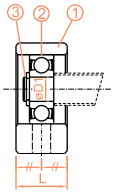

Code	Items	pcs
1	Housing	1PCS
2	Bearing	1PCS
3	C-Ring	1PCS

Unit : mm

L	N	P	X	Y	Z	C-Ring	Bearing Model
20	15	5.5	6.6	11	5	C8	608ZZ
20	18	5.5	6.6	11	1.5	C10	6000ZZ
20	18	5.5	6.6	11	6.5	C15	6002ZZ
23	28	6.6	9	14	8.5	C17	6203ZZ
26	22	6.6	9	14	8.5	C20	6004ZZ
30	33	9	11	17.5	11	C25	6205ZZ
32	33	11	14	20	13	C30	6206ZZ
32	35	11	14	20	13	C35	6207ZZ
37	37	14	18	26	17.5	C40	6208ZZ

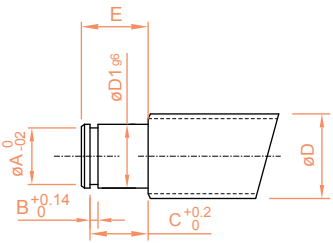

Tolerance

Dimension(mm)		unit h 0.001
Above	Under	h
6	10	-2 -15
10	18	-3 -18
18	30	-3 -21
30	50	-4 -25

C-Ring			Model BF
A	B	C	
7.6	0.9	7.9	BF-10
9.6	1.15	9.15	BF-12
14.3	1.15	10.15	BF-15
16.2	1.15	13.15	BF-17
19.0	1.35	13.35	BF-20
23.9	1.35	16.35	BF-25
28.6	1.75	17.75	BF-30
33.0	1.75	18.75	BF-35
38.0	1.95	19.95	BF-40

1-1 Features of *TBI MOTION* Support Unit of Ball Screw

EK Series (Fixed End)

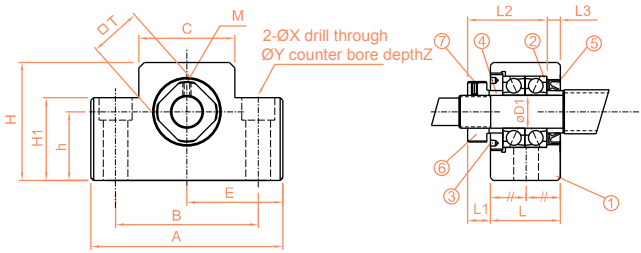

ModelNo.	D1	A	B	C	E ±0.02	H1	h ±0.02
EK-6	6	42	30	18	21	20	13
EK-8	8	52	38	25	26	26	17
EK-10	10	70	52	36	35	24	25
EK-12	12	70	52	36	35	24	25
EK-15	15	80	60	41	40	25	30

Suggest Dimension of End Machining

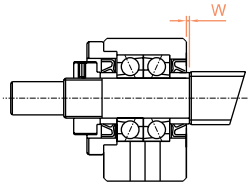

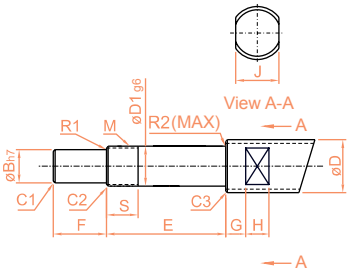

ModelNo.	Diameter	D1	B	E	F	M
EK-6	Ø6,Ø8	6	4	30	8	M6×0.75
EK-8	Ø10,Ø12	8	6	35	9	M8×1
EK-10	Ø12,Ø14,Ø15	10	8	36	15	M10×1
EK-12	Ø14,Ø15,Ø16	12	10	36	15	M12×1
EK-15	Ø18,Ø20	15	12	49	20	M15×1

※When the nominal diameter of ball screw is Ø6 and use EK06 or EF06, ball screw has to be precision ground type.

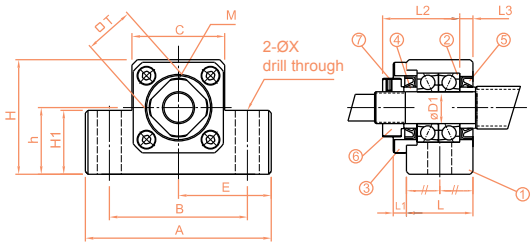

EK10-15

Code	Items	pcs
1	Housing	1PCS
2	Bearing	1SET
3	Lid	1PCS
4	Spacer	2PCS
5	Seal	2PCS
6	Lock Nut	1PCS
7	Screw with Washer	1PCS

Unit : mm

H	L	L1	L2	L3	M	X	Y	Z	T	Bearing Model
25	20	5.5	22	3.5	M3	5.5	9.5	11	12	706ATYDFC7P5
32	23	7	26	4	M3	6.6	11	12	14	708ATYDFC8P5
43	24	6	29.5	6	M3	9	-	-	16	7000ATYDFC8P5
43	24	6	29.5	6	M3	9	-	-	19	7001ATYDFC8P5
49	25	6	36	5	M3	11	-	-	22	7002ATYDFC8P5

H1 Type

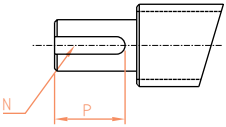

H2 Type

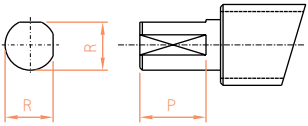

Tolerance

Dimension(mm)		unit h 0.001
Above	Under	h
6	10	-2 -15
10	18	-3 -18
18	24	-3 -21

S	J	G	H	Chamfering			Circular Radius		H1 Keyway(W×D×L)		H2		W	Model EK
				C1	C2	C3	R1	R2	N	P	R	P		
10	5	4	4	0.3	0.3	0.3	0.3	0.6	-	-	3.7	6	1.5	EK-6
10	8	5	5	0.3	0.3	0.3	0.3	0.6	-	-	5.6	7	1.5	EK-8
11	10	5	7	0.5	0.5	0.5	0.3	0.6	2×1.2	11	7.5	11	-0.5	EK-10
11	13	6	8	0.5	0.5	0.5	0.3	0.6	3×1.8	12	9.5	12	-0.5	EK-12
13	16	6	9	0.5	0.5	0.5	0.3	0.6	4×2.5	16	11.3	16	5.0	EK-15

1-1 Features of *TBI MOTION* Support Unit of Ball Screw

EK Series (Fixed End)

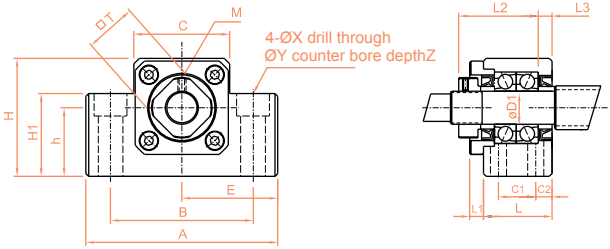

EK-20S

ModelNo.	D1	A	B	C	E ±0.02	H1	h ±0.02
EK-20	20	95	75	56	47.5	25	30
EK-25	25	105	85	66	52.5	25	35

Suggest Dimension of End Machining

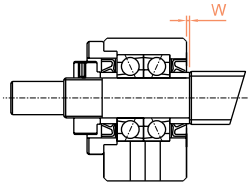

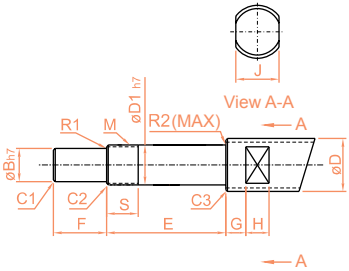

ModelNo.	Diameter	D1	B	E	F	M
EK-20	Ø25,Ø28,Ø32	20	17	64	25	M20×1
EK-25	Ø32,Ø36	25	20	65	30	M25×1.5

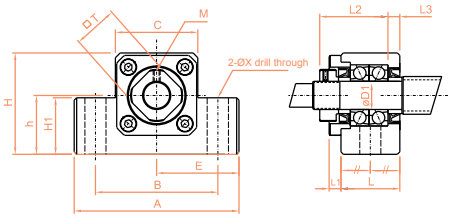

EK-20

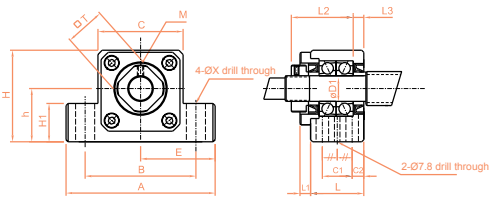

EK-25

Unit : mm

C2	C1	H	L	L1	L2	L3	M	X	Y	Z	T	Bearing Model
-	-	58	42	10	50	10	M4	11	-	-	30	7204ATYDFC8P5
9	30	68	48	13	60	14	M5	11	-	-	35	7205ATYDFC8P5

H1 Type

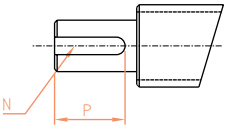

H2 Type

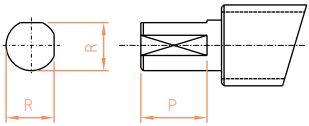

Tolerance

Dimension(mm)		unit $^{h}_{0.001}$
Above	Under	h
6	10	-2 -15
10	18	-3 -18
18	24	-3 -21

S	J	G	H	Chamfering			Circular Radius		H1 Keyway(W×D×L)		H2		W	Model EK
				C1	C2	C3	R1	R2	N	P	R	P		
17	21	8	11	0.5	0.5	0.5	0.5	0.6	5×3.0	21	16	21	1.0	EK-20
18	27	10	13	0.5	0.7	1.0	0.5	0.6	6×3.5	25	19	25	1.0	EK-25

1-1 Features of *TBI MOTION* Support Unit of Ball Screw

EF Series (Floated End)

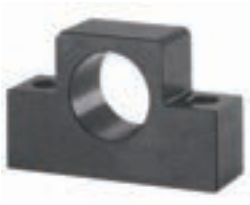

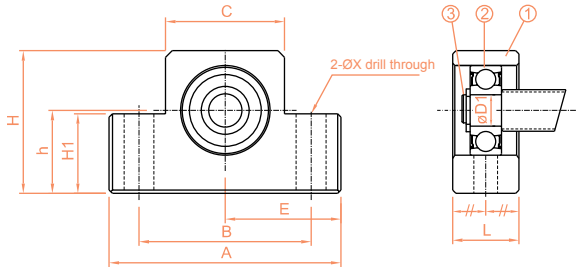

EF10-15 ; EF20-25

ModelNo.	D1	A	B	C	E ±0.02	H1	h ±0.02
EF-6	6	42	30	18	21	20	13
EF-8	6	52	38	25	26	26	17
EF-10	8	70	52	36	35	24	25
EF-12	10	70	52	36	35	24	25
EF-15	15	80	60	41	40	25	30
EF-20	20	95	75	56	47.5	25	30
EF-25	25	105	85	66	52.5	25	35

Suggest Dimension of End Machining

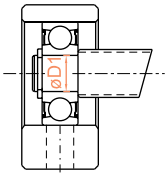

ModelNo.	Diameter	D1	E
EF-6	Ø6,Ø8	6	9
EF-8	Ø10,Ø12	6	9
EF-10	Ø12,Ø14,Ø15	8	10
EF-12	Ø14,Ø15,Ø16	10	11
EF-15	Ø18,Ø20	15	13
EF-20	Ø25,Ø28	20	19
EF-25	Ø32,Ø36	25	20

※When the nominal diameter of ball screw is Ø6 and use EK06 or EF06, ball screw has to be precision ground type.

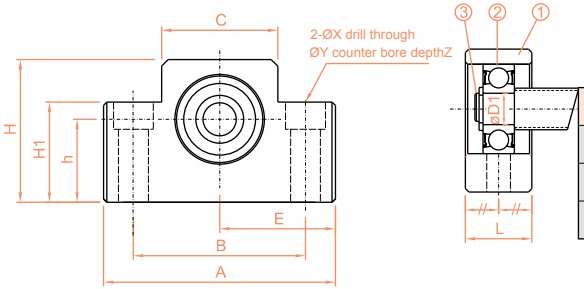

Code	Items	pcs
1	Housing	1PCS
2	Bearing	1PCS
3	C-Ring	1PCS

EF6-8

Unit : mm

H	L	X	Y	Z	C-Ring	Bearing Model
25	12	5.5	9.5	11	C6	606ZZ
32	14	6.6	11	12	C6	606ZZ
43	20	9	-	-	C8	608ZZ
43	20	9	-	-	C10	6000ZZ
49	20	9	-	-	C15	6002ZZ
58	26	11	-	-	C20	6204ZZ
68	30	-	11	-	C25	6205ZZ

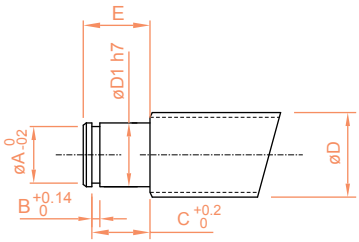

Tolerance

Dimension(mm)		unit h 0.001
Above	Under	h
6	10	-2 -15
10	18	-3 -18
18	24	-3 -21

C-Ring			Model EF
A	B	C	
5.7	0.8	6.8	EF-6
5.7	0.8	6.8	EF-8
7.6	0.9	7.9	EF-10
9.6	1.15	9.15	EF-12
14.3	1.15	10.15	EF-15
19	1.35	15.35	EF-20
23.9	1.35	16.35	EF-25

1-1 Features of *TBI MOTION* Support Unit of Ball Screw

FK Series (Fixed End)

Solution A

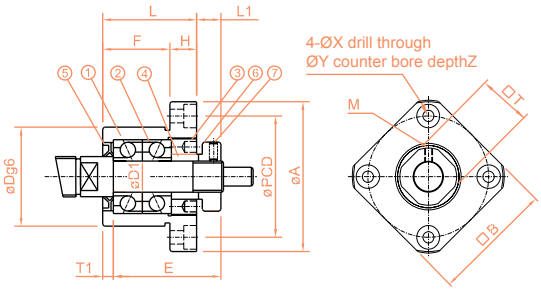

ModelNo.	D1	A	F	L	E	Dg6	H	PCD
FK-6	6	35	13	20	22	22	7	28
FK-8	8	43	14	23	26	28	9	35

Suggest Dimension of End Machining

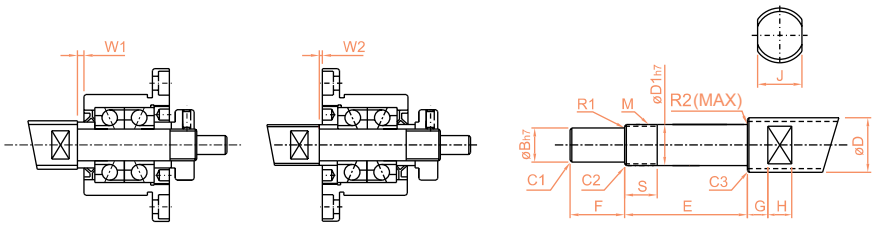

ModelNo.	Diameter	D1	B	E	F	M
FK-6	Ø8,Ø10	6	4	30	8	M6x0.75
FK-8	Ø10,Ø12	8	6	35	9	M8×1

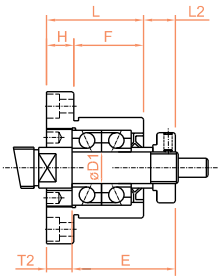

Solution B

D	g6
28	-0.007 -0.020

Code	Items	pcs
1	Housing	1PCS
2	Bearing	1SET
3	Lid	1PCS
4	Spacer	2PCS
5	Seal	2PCS
6	Lock Nut	1PCS
7	Screw with Washer	1PCS

Unit : mm

M	B	L1	T1	L2	T2	X	Y	Z	T	Bearing Model
M3	28	5.5	3.5	6.5	4.5	2.9	5.5	3.5	12	706ATYDFC8P5
M3	28	5.5	3.5	6.5	4.5	2.9	5.5	3.5	12	706ATYDFC8P5

H1 type

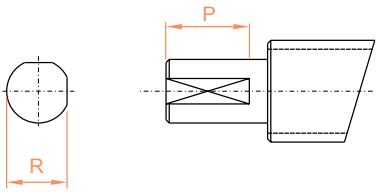

Tolerance

Dimension(mm)		unit $^{h}_{0.001}$
Above	Under	h
6	10	-2 -15

S	Chamfering			Circular Radius		H1		W1	W2	Model FK
	C1	C2	C3	R1	R2	R	P			
12	0.3	0.3	0.3	0.3	0.6	3.7	6	1.5	0.5	FK-6
15	0.5	0.5	0.5	0.3	0.6	5.6	7	1.5	0.5	FK-8

1-1 Features of *TBI MOTION* Support Unit of Ball Screw

FK Series (Fixed End)

Solution B

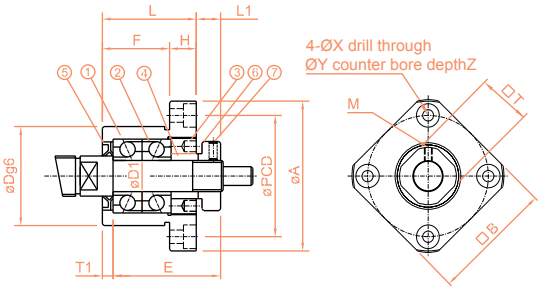

Solution A

ModelNo.	D1	A	F	L	E	Dg6	H	PCD
FK-10	10	52	17	27	29.5	34	10	42
FK-12	12	54	17	27	29.5	36	10	44
FK-15	15	63	17	32	36	40	15	50
FK-20	20	85	30	52	50	57	22	70
FK-25	25	98	30	57	60	63	27	80
FK-30	30	117	32	62	61	75	30	95

Suggest Dimension of End Machining

H1 Type

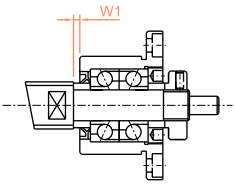

H2 Type

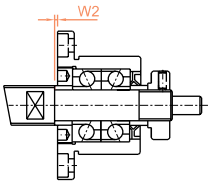

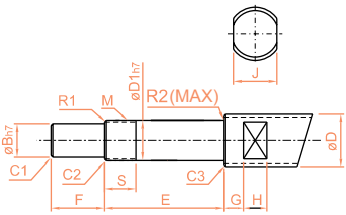

ModelNo.	Diameter	D1	B	E	F	M
FK-10	Ø12,Ø14,Ø15	10	8	36	15	M10×1
FK-12	Ø14,Ø15,Ø16	12	10	36	15	M12×1
FK-15	Ø18,Ø20	15	12	49	20	M15×1
FK-20	Ø25,Ø28	20	17	64	25	M20×1
FK-25	Ø32,Ø36	25	20	76	30	M25×1.5
FK-30	Ø40,Ø50	30	25	72	38	M30×1.5

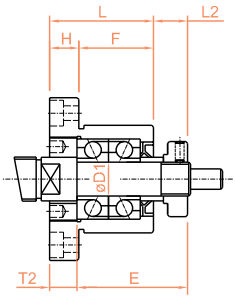

Solution B

D	g6
34	-0.009 -0.025
36	-0.009 -0.025
40	-0.009 -0.025
57	-0.010 -0.029
63	-0.010 -0.029
75	-0.010 -0.029

Code	Items	pcs
1	Housing	1PCS
2	Bearing	1SET
3	Lid	1PCS
4	Spacer	2PCS
5	Seal	2PCS
6	Lock Nut	1PCS
7	Screw with Washer	1PCS

Unit : mm

M	B	L1	T1	L2	T2	X	Y	Z	T	Bearing Model
M3	42	7.5	5	8.5	6	4.5	8	4	16	7000ATYDFC8P5
M3	44	7.5	5	8.5	6	4.5	8	4	19	7001ATYDFC8P5
M3	52	10	6	12	8	5.5	9.5	6	22	7002ATYDFC8P5
M4	68	8	10	12	14	6.6	11	10	30	7204ATYDFC8P5
M5	79	13	10	20	17	9	15	13	35	7205ATYDFC8P5
M6	93	14	12	17	18	11	17.5	15	40	7206ATYDFC8P5

H1 Type

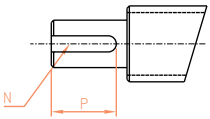

H2 Type

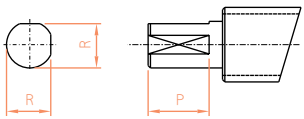

Tolerance

Dimension(mm)		unit $^{h}_{0.001}$
Above	Under	h
6	10	-2 -15
10	18	-3 -18
18	30	-3 -21

S	J	G	H	Chamfering			Circular Radius		H1		H2		W1	W2	Model FK
				C1	C2	C3	R1	R2	N	P	R	P			
11	10	5	7	0.5	0.5	0.5	0.3	0.6	2×1.2	11	7.5	11	0.5	0.5	FK-10
11	13	6	8	0.5	0.5	0.5	0.3	0.6	3×1.8	12	9.5	12	0.5	0.5	FK-12
13	16	6	9	0.5	0.5	0.5	0.3	0.6	4×2.5	16	11.6	16	4	2	FK-15
17	21	8	11	0.5	0.5	0.5	0.5	0.6	5×3.0	21	16	21	1	-3	FK-20
20	27	10	13	0.5	0.5	0.5	0.5	0.6	6×3.5	25	19	25	5	-2	FK-25
25	32	10	15	0.5	0.5	0.5	0.5	0.6	8×4	32	23.5	32	-3	-6	FK-30

1-1 Features of *TBI MOTION* Support Unit of Ball Screw

FF Series (Floated End)

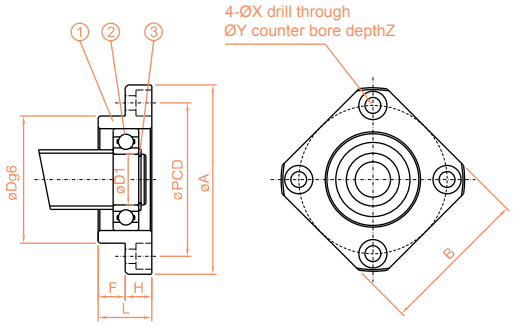

ModelNo.	D1	L	H	F	Dg6	A
FF-6	6	10	6	4	22	36
FF-10	8	12	7	5	28	43
FF-12	10	15	7	8	34	52
FF-15	15	17	9	8	40	63
FF-20	20	20	11	9	57	85
FF-25	25	24	14	10	63	98
FF-30	30	27	18	9	75	117

Suggest Dimension of End Machining

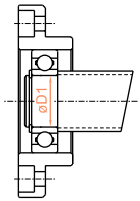

ModelNo.	Diameter	D1	E
FF-6	Ø10,Ø12	6	9
FF-10	Ø12,Ø14,Ø15	8	10
FF-12	Ø14,Ø15,Ø16	10	11
FF-15	Ø18,Ø20	15	13
FF-20	Ø25,Ø28	20	19
FF-25	Ø32,Ø36	25	20
FF-30	Ø40,Ø50	30	21

D	g6
22	-0.007 -0.020
28	-0.007 -0.020
34	-0.009 -0.025
40	-0.009 -0.025
57	-0.010 -0.029
63	-0.010 -0.029
75	-0.010 -0.029

Code	Items	pcs
1	Housing	1PCS
2	Bearing	1PCS
3	C-Ring	1PCS

Unit : mm

PCD	B	X	Y	Z	C-Ring	Bearing Model
28	28	3.4	6.5	4	C6	606ZZ
35	35	3.4	6.5	4	C8	608ZZ
42	42	4.5	8	4	C10	6000ZZ
50	52	5.5	9.5	5.5	C15	6002ZZ
70	68	6.6	11	6.5	C20	6204ZZ
80	79	9	14	8.5	C25	6205ZZ
95	93	11	17.5	11	C30	6206ZZ

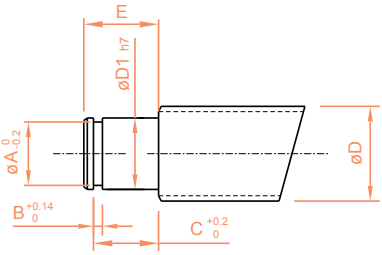

Tolerance

Dimension(mm)		unit h 0.001
Above	Under	h
6	10	-2 -15
10	18	-3 -18
18	30	-3 -21

C-Ring			Model FF
A	B	C	
5.7	0.8	6.8	FF-6
7.6	0.9	7.9	FF-10
9.6	1.15	9.15	FF-12
14.3	1.15	10.15	FF-15
19	1.35	15.35	FF-20
23.9	1.35	16.35	FF-25
28.6	1.75	17.75	FF-30

Memo

Coupling

1-1 Features of TBI MOTION Coupling H02
SRJ Specifications H02
Function H03

1-1 Features of *TBI MOTION* Coupling

SRJ Specifications

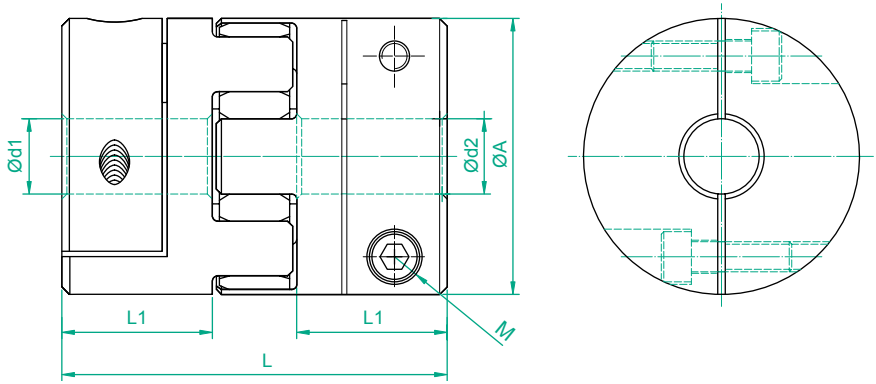

Unit : mm

ModelNo.	A	L	L1	dmax	(H8)d1xd2		M
					d1	d2	
SRJ-20C	20	30	10	8	5,6,6.35,7,8		M3
SRJ-30C	30	35	11	14	6,6.35,8,9,9.5,10,11,12,14		M4
SRJ-40C	40	66	25	20	10,11,12,14,15,16,18,19,20		M5
SRJ-55C	55	78	30	25	15,16,18,19,20,22,24,25		M6
SRJ-65C	65	90	35	35	15,16,18,19,20,22,24,25,28,30,32,35		M8

※ Specifications Number：SRJ-AC-d1xd2
※ Material：Aluminum Alloy
※ Buffer Material：Engineering Class Plastic

Function

ModelNo.	RateTorque (N · m)	MaxTorque (N · m)	Max Rotational Spring Rigidity (min-1)	Static Torsion Spring Rigidity (N · m/rad)	Dynamic Torsion Spring Rigidity (N · m/rad)
SRJ-20C	5	10	15200	51.0	151
SRJ-30C	12.5	25	10200	170.9	505
SRJ-40C	17	34	7600	857.5	2571
SRJ-55C	60	120	5600	2060	6163
SRJ-65C	160	320	4700	3430	10291

ModelNo.	Weight (g)		Mass Moment of Inertia J (kg-m^2)		Radial (mm)	Angular (°)	Axial (mm)
	each hub	spider	each hub	spider			
SRJ-20C	8.5	1.7	0.46×10^{-3}	0.073×10^{-3}	0.10	1.0	0.8
SRJ-30C	18	4.2	2.5×10^{-3}	0.45×10^{-3}	0.15	1.0	1
SRJ-40C	64	6.5	20.1×10^{-3}	1.44×10^{-3}	0.15	1.0	1.2
SRJ-55C	130	17.4	50.5×10^{-3}	7.3×10^{-3}	0.2	1.0	1.4
SRJ-65C	250	28.6	200.1×10^{-3}	16.3×10^{-3}	0.2	1.0	1.5

TBI MOTION Linear Guideway Inquiry Form

Customer :		**Date :**
TEL :	**Email :**	**Confirm By :**
Machine Type :		**Drawing No. :**
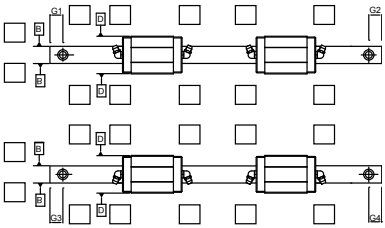
Axis	☐ X ☐ Y ☐ Z ☐ Other ( )
Install Position	☐ ☐ ☐ ☐ ☐ ☐ ☐ ☐
Model No.	
No.of Rail Per Axis	☐ 1 ☐ 2 ☐ 3 ☐ 4 ☐ Other :
Dust Protection	☐ Standard ☐ U ☐ UZ ☐ UD ☐ XN ☐ UN ☐ ZN ☐ WW ☐ WU ☐ WZ ☐ Other
Rail Length / Butt joint	☐ Length mm Butt-joint : ☐ NO ☐ YES
Pitch	G1 : G2 :
Accessory Code	☐ N (Normal) ☐ H (High) ☐ P (Precision) ☐ SP (Super Precision) ☐ UP (Ultra Precision)
Preload	☐ ZF (Slight Clearance) ☐ Z0 (No Preload) ☐ Z1 (Light Preload) ☐ Z2 (Medium Preload) ☐ Z3(Heavy Preload)
Rail Per Axis	☐ 1 ☐ 2 ☐ 3 ☐ Other :
Rail Mounting	☐ FromTop ☐ K From Bottom ☐ X Railwith Special Maching
Special Cladding	☐ B (Black Oxidation) ☐ O (Hard Chrome Plating) ☐ P (Phosphating) ☐ N (Nickel Plating) ☐ D (Raydent)
Lubrication Type	☐ Grease ☐ Oil
Lubrication Fitting	☐ Grease nipple (Code :) ☐ Oil piping joint (Code :)
Special Option	☐ Steel end seal ☐ Steel end cap ☐ Cover Strip ☐ Other :
TBIMOTION Model No.	
Reference surface & Injection Direction